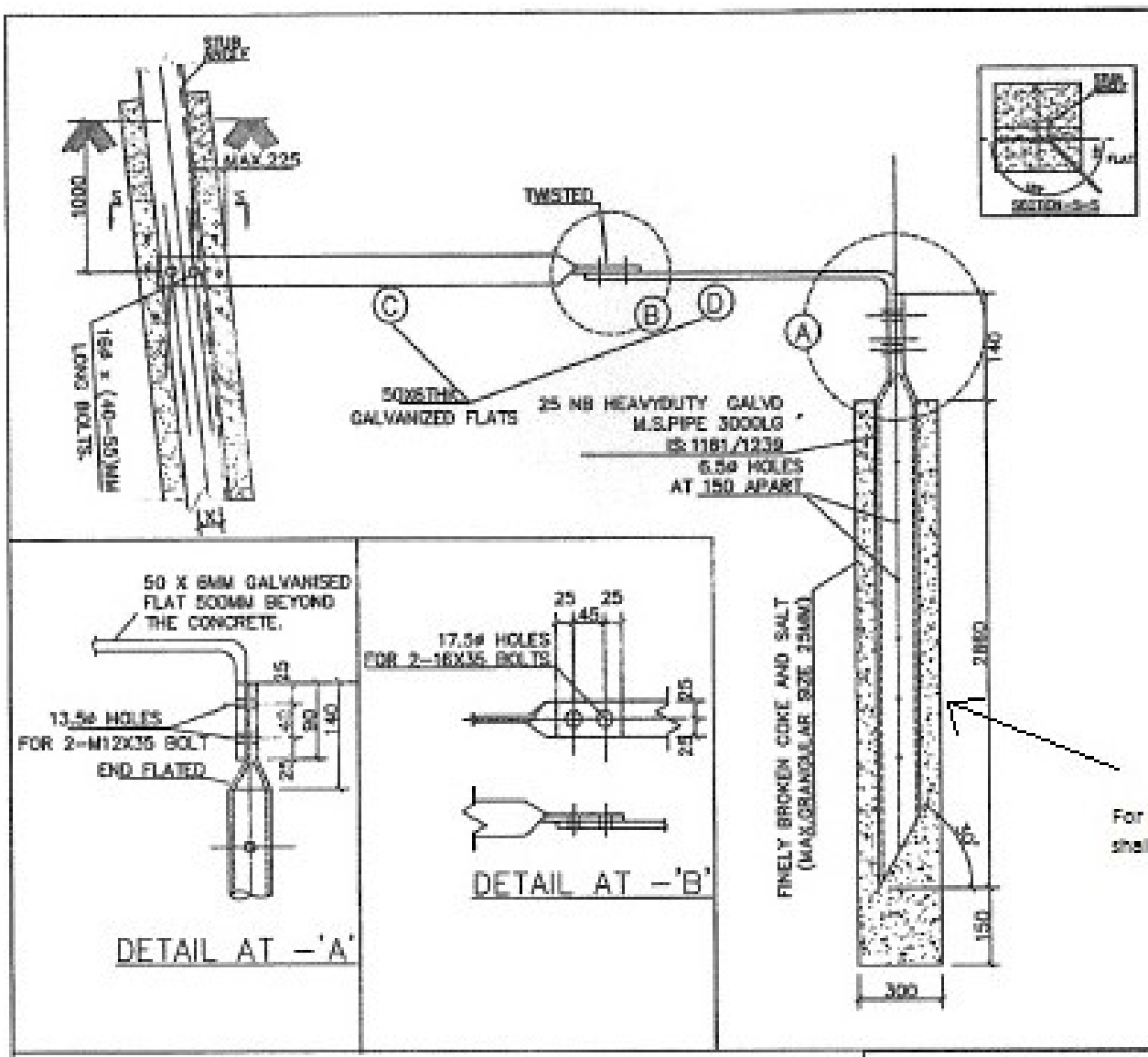

NOTE :-

1. "C"STRIP IS TO BE PROVIDED ON ONE LEG OF EACH TOWER, WHICH WILL BE SUPPLIED WITH STUB .
2. "D"STRIP WITH PIPE EARTHING ARRANGEMENT IS TO BE PROVIDED ON ONLY ONE LEG.
3. 17.5ø HOLES SUITABLE FOR 16MM ø BOLT CONFIRMING TO IS:12427-2001, CLASS 5.6 & IS:14394-1996, Gr. 5 FOR HEX NUT UNLESS OTHERWISE SPECIFIED.
4. FOR COUNTERPOISE EARTHING STRIP 'C' SHALL BE CONNECTED WITH COUNTERPOISE WIRE THROUGH 'A' LUG.
5. ALL DIMENSIONS ARE IN MM.
6. 12 & 16MM DIA SPRING WASHER SHALL CONFIRM TO IS:3063-1994 TYPE B AND ELECTRO GALVANIZED AS PER IS:1573-1986.
7. HDG BOLT/NUTS TO BE GALVANIZED AS PER IS:1367(P-13)-1983.
8. C & D FLATS TO BE HOT DIP GALVANIZED AS PER IS:2629-1985.
9. MATERIAL FOR C & D FLAT AS PER IS:2062 GRADE "A".
10 . X TO BE COMPATIBLE WITH STUB

For Chemical earthing Chemical Compound shall be used in place of coke & salt

LIST OF BOLTS & NUTS / TOWER.

S.NO	SIZE					QTY
1	STUB THICK.(mm)	0-11	12-16	17-21	22-28	2
	LENGTH OF M16 BOLT (mm)	40	45	50	55	
2	M-16 x 35LG					2
3	M-12 x 35LG					2
4	16MM DIA 3.5MM THK.SP.WASHER					4
5	12MM DIA 2.5MM THK.SP.WASHER					2

STANDARD DRAWING

POWER GRID CORPORATION OF INDIA LIMITED
(A GOVERNMENT OF INDIA ENTERPRISE)

REVISION

REV. No	DESCRIPTION	CHKD	REVIEW	APPD

CLEARED BY

PROJECT: 765/400 KV TRANSMISSION SYSTEM

TITLE: PIPE TYPE EARTHING

DRAWN | REVIEWED | APPROVED

SCALE: N.T.S.

DRAWING No: CC:EMG/TL/LCC-SETS/PP:765/400 sheet 1/2